City of Park Ridge
Community Preservation & Development Department
BUILDING DIVISION

RESIDENTIAL STORMWATER CONTROL

Mission Statement

To provide minimum requirements to safeguard the public safety, health and welfare, through affordability, structural strength, means of egress facilities, stability, sanitation, light and ventilation, energy conservation and safety to life and property from fire and other hazards attributed to the built environment.

(UPDATED 5-1-2009)

Dear Homeowner and/or Contractor,

This guide is designed to assist you in your residential stormwater drainage. This guide is intended to give the reader an overview of things that can be done to protect a property from stormwater damage.

The City of Park Ridge does not employ a civil engineer to review or inspect residential properties. The reader must assume responsibility for adapting this information to their conditions. This guide is not intended to replace the advice and guidance of an experienced professional who is able to examine the property and assess the needs of the particular situation.

The city does not refer and/or recommend any specific contractors, materials or designs.

No property is perfect. Water drains downhill. Most neighborhoods were built on natural slopes and some properties naturally slope to neighboring properties.

You must first determine what type of situation is occurring. After you have investigated your situation, and determined your issue, refer to the following pages for options to protect your property.

Respectfully,

The City of Park Ridge Building Division
847-318-5391

POSSIBLE ISSUES

Seepage

Seepage occurs when water in the surrounding soil forces its way into the basement through cracks in the walls and/or floors. The seepage is most often a trickle of clear to slightly dirty water. Refer to a possible solution on page 4.

Sewer Backup

Sewer Backup can result from a few conditions:

1. The sanitary sewer pipe from your house to the City sewer main may be obstructed. Tree roots, a blockage, or a collapsed pipe may cause the obstruction.
2. During heavy rainfalls or snowmelt, City sewers may become temporally overloaded or surcharged. The pressure from the surcharged sewer main can cause water to backup into your sanitary service pipe and then into your basement through your drains. Refer to possible solution on pages 5-7.

Ponding

Ponding occurs when water collects in digressional areas. Because the ponding area is lower than the surrounding yard, the water remains confined. Refer to possible solution on page 8.

Overland Flooding

Overland flooding occurs when there is an extremely heavy rainfall and the excess water flows onto properties, floods the yard and sometimes enters structures. The excess water results from a temporally overloaded sewer system and saturated soils that cannot absorb additional water. Refer to possible solution on page 8.

Seepage

Solutions:

- **Check exterior gutters**. Clogged gutters have been known to trickle down a wall and enter the basement.
- **Check exterior grading**. It takes many years for uncompacted excavations to settle resulting in back-pitched grades toward the structure. *Refer to grading designs on pages 8-11.*
- **Check for back-pitched exterior sidewalks/patios/stoops**. Many times the exterior slabs settle and slope toward the structure. *Refer to grading designs on pages 8-11.*
- **Check foundation walls for cracks.** All foundations have cracks. The latest method of repair is an epoxy ejection.
- **Check Downspouts.** Make sure downspouts discharge at least three feet from the house. Water discharged close to the house has a greater chance of entering the basement.
- **Check drain tile**. Most homes have exterior drain tile systems with or without pumps. Older clay pipes become clogged over the years. A licensed plumber may be able to clean these pipes. The old clay pipes never had hubs; often these pipes become clogged over the years. Many homeowners are installing new interior drain tile systems with a pump discharge system.

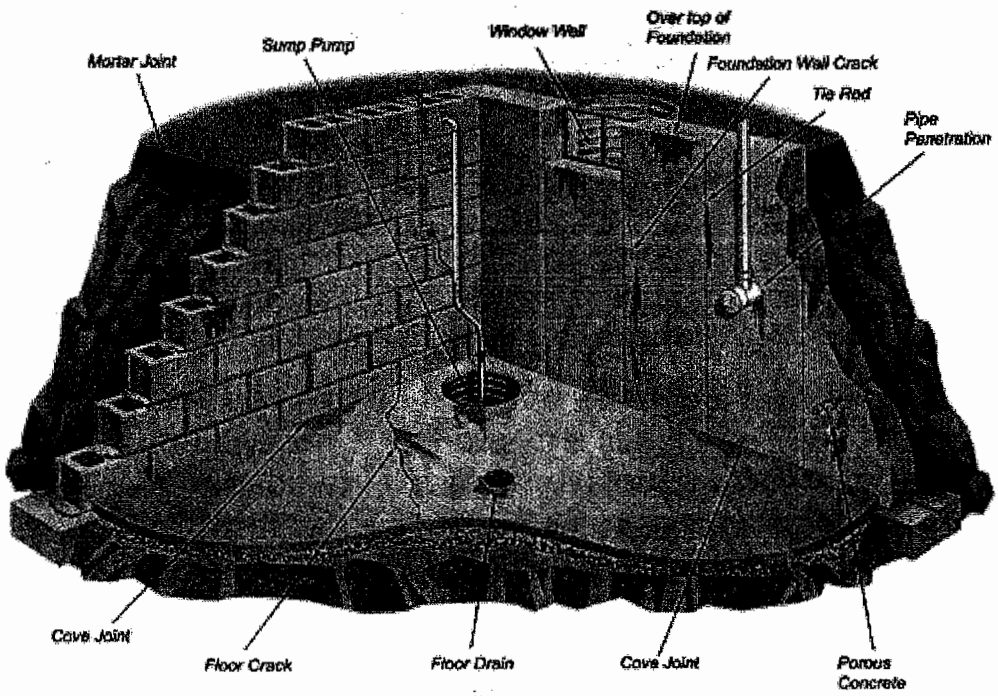

Sewer Backup

Solutions:

If your sanitary service is obstructed, a private licensed plumber will be able to clean or repair the pipe.
If you are getting sewer backup from surcharged sewers, there are various ways to prevent this. Three options are described below.

Flood Control Descriptions

BACKWATER VALVE

A backwater valve is a fixture that is installed on the sanitary service line, in a vault, about ten feet from the house that prevents backup from the City sewer. Backwater valves are designed to temporarily block the pipe to prevent water from entering the house. A properly closed valve does not allow sewerage in or out. In order to use the sewer while the valve is closed, an ejector pump must be installed to force wastewater into the sewer main.

OVERHEAD

An overhead sewer system is when the plumbing fixtures above grade drain by gravity to the main sewer. These drain lines are installed "overhead" in the basement. All other plumbing fixtures below grade in the basement drain to an ejector pump. An ejector pump brings the sanitary waste to the overhead level. Normally sewer backup does not reach the overhead level, which is normally four feet below grade compared to the basement floor, which can be almost twelve feet below grade.

LIFT STATION

A lift station concept is a cross between an overhead and backwater valve system. A lift station is a fixture that is installed on the sanitary service line, in a vault, about ten feet from the house. The sanitary sewer line is disconnected in the vault. The sanitary waste from the house drains to a pit with an ejector pump. The ejector pump brings the sanitary waste up to the a level of about four feet from the surface then back down to the sanitary line.

TYPICAL RESIDENCE

BACKWATER VALVE

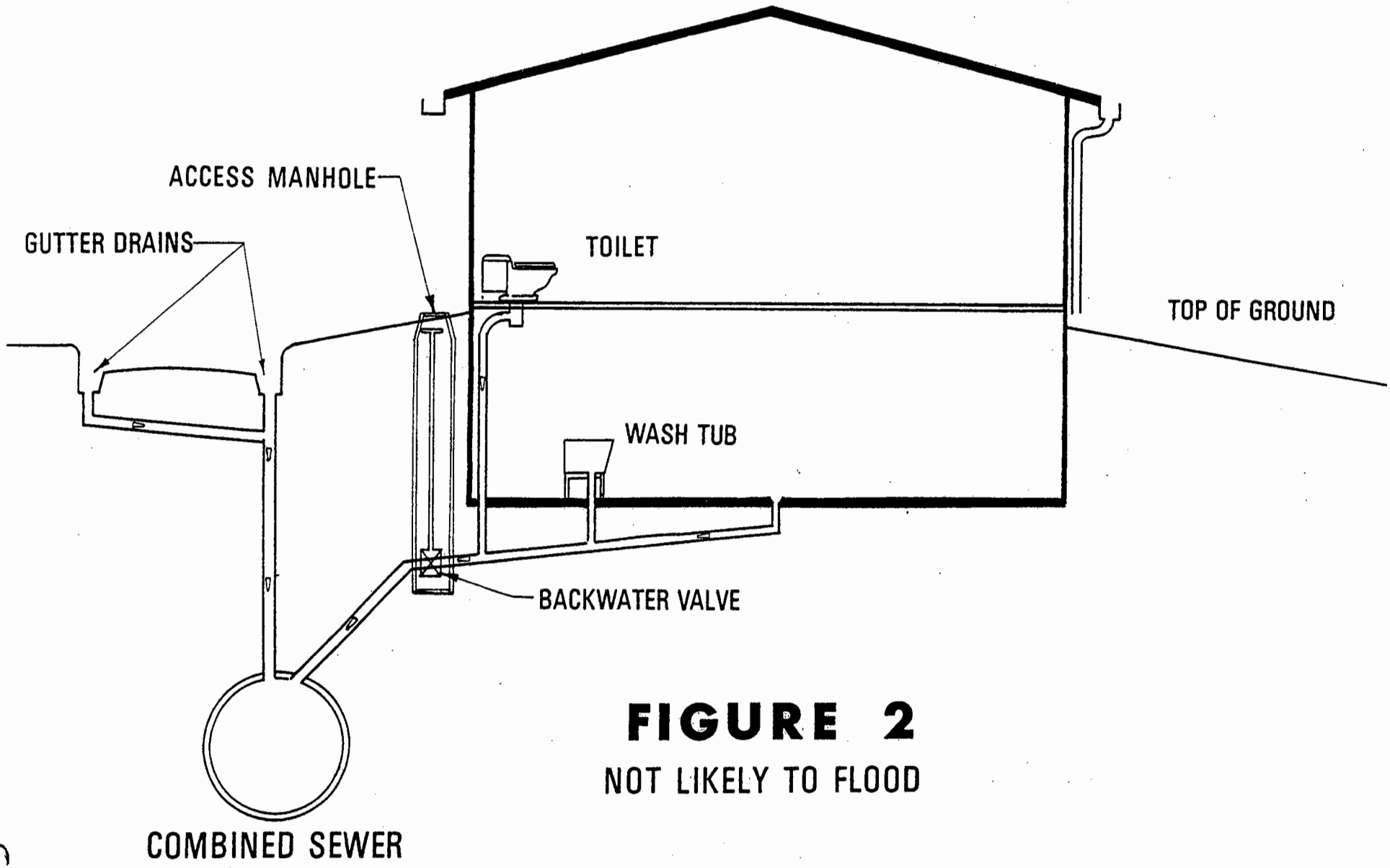

FIGURE 2

NOT LIKELY TO FLOOD

TYPICAL RESIDENCE

OVERHEAD SEWER

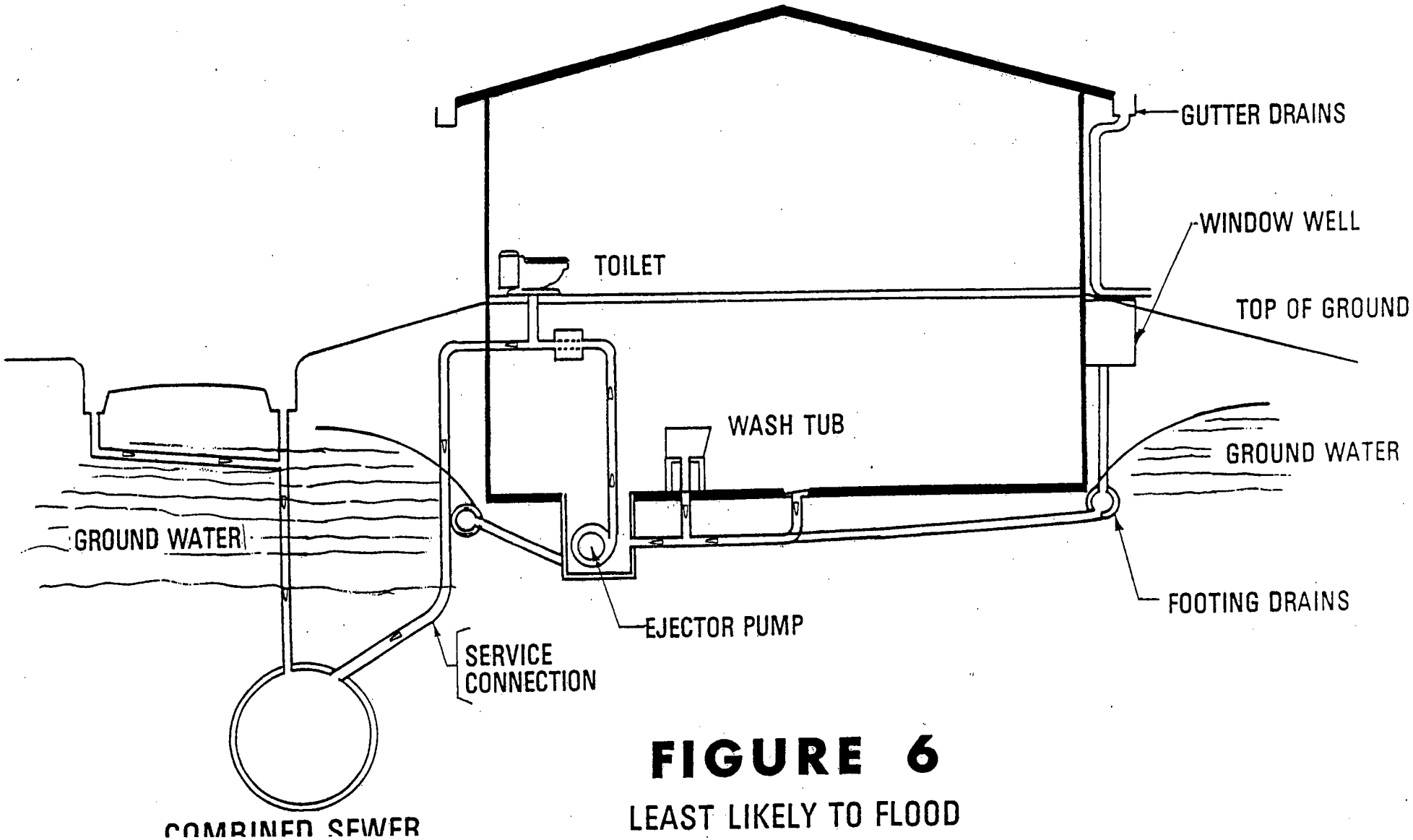

FIGURE 6

LEAST LIKELY TO FLOOD

Ponding

Solutions:

- **Check exterior grades.** Water runs down hill. IDEALLY, all grades should flow away from your structures to a property line swale. The property line swales should slope to the front and/or rear. A drainage system may be needed. *Refer to grading designs on pages 8-10.*
- **Check for back-pitched exterior sidewalks/patios/stoops.** Many times the exterior slabs settle and slope toward the structure. *Refer to grading designs on pages 8-10.*
- **Check exterior impervious surfaces.** Perhaps too much of your property is covered and cannot accept rainwater into the ground.

Overland Flooding

Solutions:

- **Check exterior grades.** Water runs down hill. IDEALLY, all grades should flow away from your structures to a property line swale. The property line swales should slope to the front and/or rear. A drainage system may be needed. *Refer to grading designs on pages 8-10.*
- **Check for back-pitched exterior sidewalks/patios/stoops.** Many times the exterior slabs settle and slope toward the structure. *Refer to grading designs on pages 8-10.*
- **Check exterior impervious surfaces.** Perhaps too much of your property is covered and cannot accept rainwater into the ground.
- **Unfortunately, many times this issue cannot be prevented if your property is basically located at the bottom of a hill.**

SWALE DESIGN

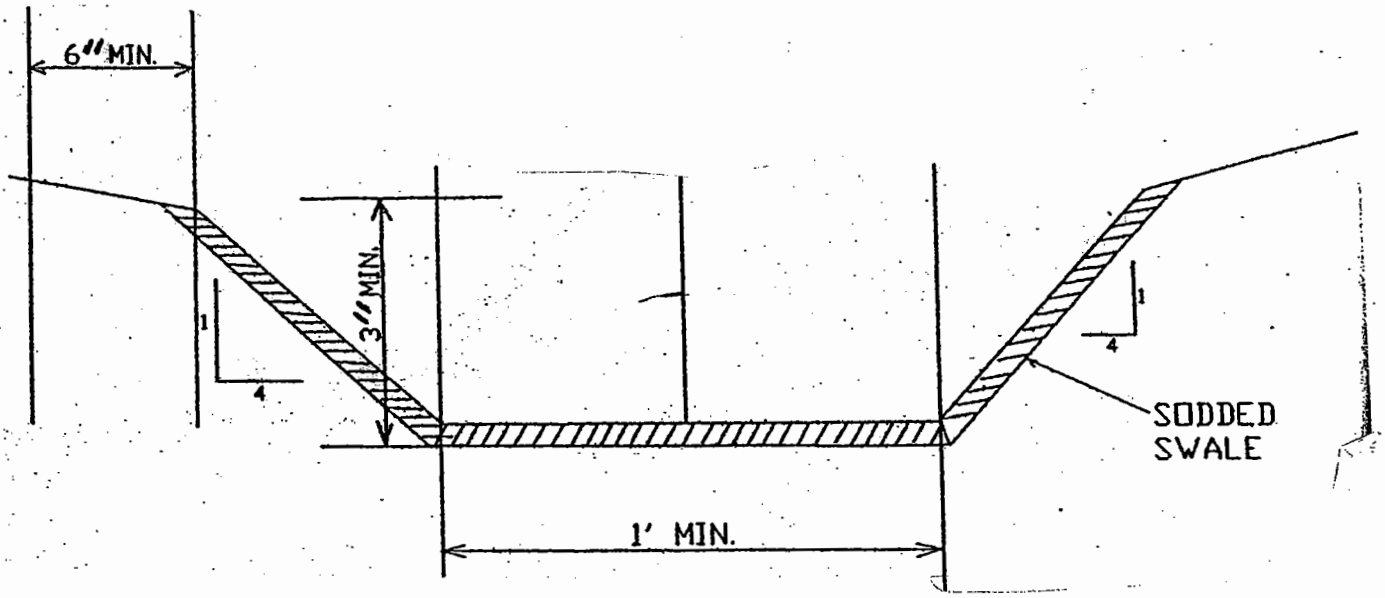

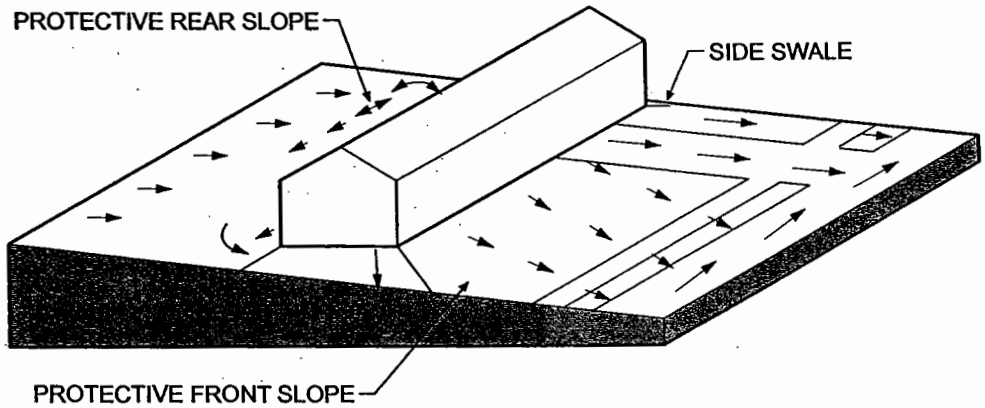

GRADING METHOD FOR LOT WHERE SLOPE IS FROM REAR TO FRONT LOT.
DRAINAGE SWALES ARE LOCATED AT REAR AND SIDES OF DWELLING.

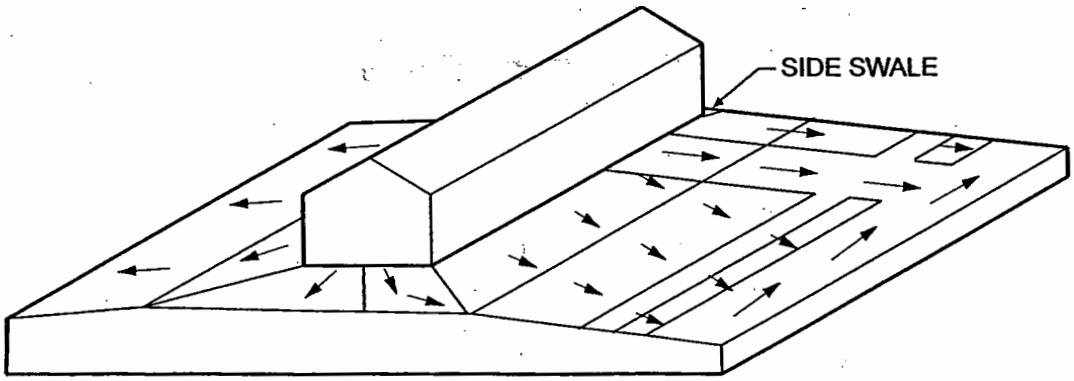

GRADING METHOD FOR LOT WHERE DWELLING IS LOCATED ON A RIDGE.
DRAINAGE SWALES ARE LOCATED AT SIDE YARDS IN AREA OF POSITIVE SLOPES.

DRAINAGE SYSTEMS

The above illustration demonstrates the various applications for NDS drainage products. Product is enlarged to show detail. Numbered frames around product correspond to different product categories and their applications. See detailed drawings below.

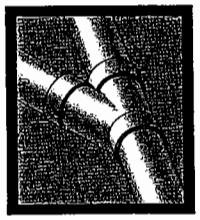

1
Sewer and Drain Fittings
APPLICATIONS: Sewer and drain piping systems, down spouts.

2
Channel Drains
APPLICATIONS: Parking lots, warehouses, driveways, pools, spas, patios, sidewalks and wash-down areas.

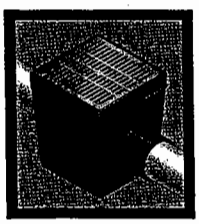

3
Large Catch Basins
APPLICATIONS: Large lawn areas, large landscape areas, residential driveways and garages.

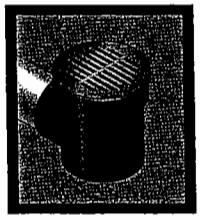

4
Small Catch Basins
APPLICATIONS: Lawn areas, landscape areas.

5
Small Round, Square & Atrium Grates
APPLICATIONS: Small lawn areas, small landscape areas, patios, atriums, mulch and landscape areas.

6
Pop-Up Emitters
APPLICATIONS: Discharges water onto the surface near sidewalks, curbs or other water safe areas. No cutting curbs.

POP-UP DISCHARGE

The Pop-Up Drainage Emitter
allows water to be diverted and released to water-safe areas away from structures, erosion-prone landscapes and poor drainage areas.

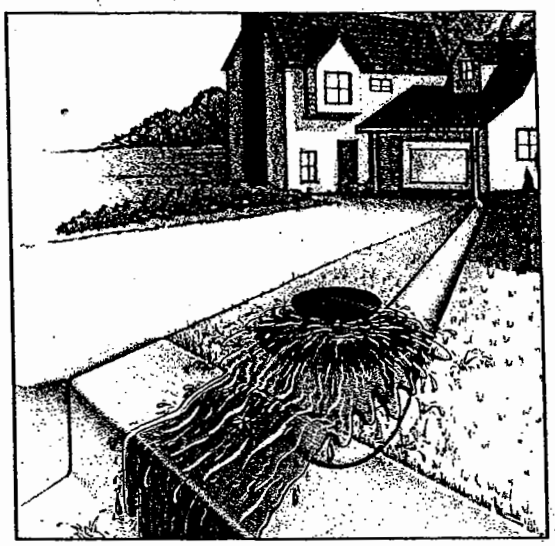

The Pop-Up Drainage Emitter
allows water captured by grates, catch basins, channel drains, downspouts and roof gutter systems to flow through the drainage pipe and away from structural foundations to safe or useful areas. For example, water can be routed from a low area next to a foundation to a water safe area such as a curbside drainage system.

The Pop-Up Drainage Emitter
is opened by the hydrostatic pressure of water flowing through the drain pipe. As flow diminishes the emitter closes again. The special patent-pending design allows the Emitter to open with a negligible amount of pressure. Since the Emitter is closed during dry weather, debris and rodents cannot enter the drain pipes

The Pop-Up Drainage Emitter
does not rise high enough to interfere with mowers and it blends into the surrounding landscape.

Other solutions that offer minor storm water detention are; rain barrels, rain gardens and French drains.

"FRENCH DRAIN"

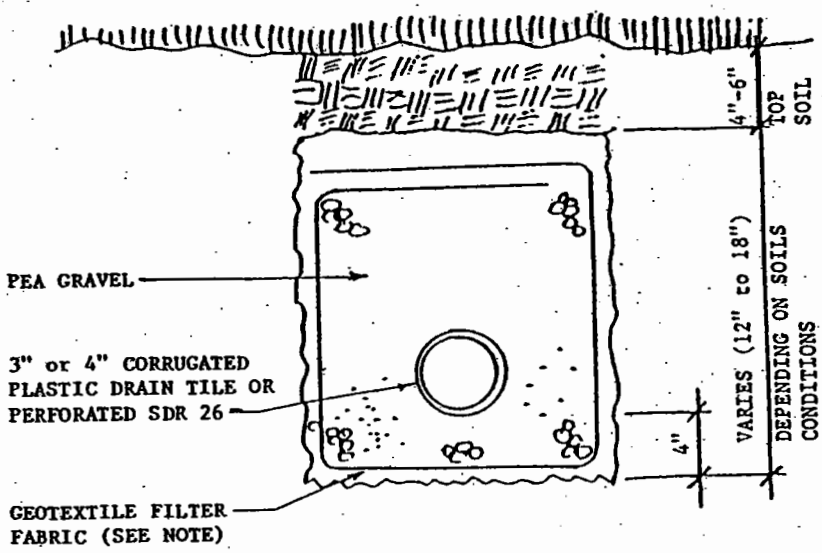

City of Park Ridge
Community Development Department
Building Division

RESIDENTIAL CONSTRUCTION REGULATIONS

1. Applicable Building Codes
2. Basic Regulations
3. Construction Site Ordinance
4. Construction Requiring Permits
5. Construction Site Design
6. Required Inspections
7. Grading Guidelines

To provide minimum requirements to safeguard the public safety, health and welfare, through affordability, structural strength, means of egress facilities, stability, sanitation, light and ventilation, energy conservation and safety to life and property from fire and other hazards attributed to the built environment.

(UPDATED 6-2009)

Welcome and thank you for building in the City of Park Ridge. To ensure public safety, and proper construction this brochure was created for your guidance. We are here to help you achieve your construction goals in a safe code compliant manner. Should you have questions, problems, or need to schedule an inspection call 847-318-5291.

1. APPLICABLE BUILDING CODES

- International Building Code - *latest version*
- International Residential Code - *latest version*
- International Mechanical Code - *latest version*
- International Energy Conservation Code –2005-State of Il.
- National Electric Code - *latest version*
- Illinois State Plumbing Code
- Illinois Accessibility Code
- BOCA National Fire Prevention Code - *latest version*
- Life Safety Code 101 2000
- NFPA National Fire Code & Standards

THE CITY AMENDMENTS TO THE ABOVE ADOPTED CODES ARE ON THE PARK RIDGE WEB PAGE AT: www.parkridge.us (In the Ordinances, in chapter 15)
Or can be purchased in the Finance Department

TO PURCHASE THESE BOOKS CONTACT THE INTERNATIONAL CODE COUNCIL AT: 800-214-4321 / www.intlcode.org

2. BASIC REGULATIONS

CP & D - Building Division 847-318-5291

J.U.L.I.E. 800-892-0123 Com Ed 800-344-7661 Nicor Gas 888-642-6748

- **CONSTRUCTION SITE SIGNAGE** The Site shall have the site address, contractor name and phone number posted at all times. The site shall be maintained clean and orderly.

- **SAFETY FENCING** is required and shall be maintained throughout the construction process.

- **CONSTRUCTION HOURS:** (deliveries and any type of noise)
  - Mon-Fri 7:00am-7:00pm, Sat. 8:00am-5:00pm
  - (Construction work that does not require fencing around the construction site or the construction area may be performed on Sundays and Holidays between the hours 8:00am –5:00 pm)

- **NO TRESSPASSING** on neighboring property (Their approval may be required for a final occupancy.)

- **SIDEWALKS, STREETS, AND ALLEYS** shall be maintained clear, clean and unobstructed.

- **DUST/OPEN BURNING** is prohibited; demolitions shall be sprayed with City water using the City hydrant.

- **GRASS shall** not be permitted to grow over 12" high per Ordinance 5-11-2.

- **SPOTTED PLATS OF SURVEYS** are required prior to framing for all New Homes and Detached garages. Showing all setback dimensions and Top of Foundation height.

- **GRADES** ALL grades shall be at or below the existing neighboring grade(s). SWALES shall be installed along the property lines and slope toward the front ad or rear. Downspouts shall face to the front and rear, NOT toward neighboring properties.

- **APPROVED STAMPED PLANS** shall be available and on site at all times.

- **SUBCONTRACTORS** are recommended to be present upon inspection. Changes shall be re-submitted and approved.

3. CONSTRUCTION SITE ORDINANCE

City Ordinance 15-1-19 CONSTRUCTION SITE CONDITIONS

FENCING- All demolition, new construction, room additions and remodeling projects must have a dumpster or containers on site which are adequate in size for the containment and disposal of all job site refuse. All job sites must comply with all applicable sections of Article 5, Chapter 12 of this Code.

All demolition and new construction, which involve trenching, excavation, utility, and any other types of construction as deemed necessary by the Building Official shall have fencing installed around the entire perimeter of the construction site. All fencing shall be a six (6) foot high chain link fence attached to driven posts along the side yards and installed on pedestals or stands along the front and/or rear of the property.

Room additions and other minor projects shall have fencing installed around the perimeter of the construction area as deemed necessary by the Building Official. The fencing for these types of construction projects shall be a minimum of four (4) feet in height. Plastic snow fencing installed securely with approved fence posts may be used.

Fencing shall be installed at the start of any excavation or demolition and shall be removed when the structure(s) are completed and secured.

C. **All excavations** shall be tapered, tarped, and shored to prevent damage to adjoining properties and all open holes and basements on a job site shall be pumped out until all excess water is removed.

D. **Chemical toilets** shall be provided and maintained when no functioning toilet is available on a job site. Portable toilets shall be located in the rear of the construction site when there is access to the rear yard so that the unit may be maintained and the unit shall not be placed closer than five (5) feet to any property line. Portable toilets shall be removed once a functioning toilet is available on the job site.

E. **Construction stockpiles** shall not be placed closer than five (5) feet to any property line and shall not exceed 8 feet in height. Construction stockpiles shall be placed in a manner that will not affect the construction process, prevent the placement of a refuse storage dumpster or portable toilet on site, and shall not cause a nuisance as defined in Article 12 Chapter 1, of the Municipal Code.

F. **Silt fencing** shall be properly installed around any soil stockpile or drain deemed necessary by the Building Official to control erosion, protect the sewers or to prevent a nuisance or unsafe condition.

G. **Temporary construction sign** shall be installed in conformance to the Park Ridge Zoning Ordinance on all construction sites where a new building is being constructed and such temporary signs shall not exceed six (6) square feet in area, or five (5) feet in height. The sign shall display the construction company name and telephone number, and the site address with at least three (3) inch letters and numbers. In addition, the sign shall also display the Building Permit.

H. **Haul roads** are required from the start of any excavation or demolition until prior to final grading. The road shall be placed anywhere construction vehicles drive upon the construction site or parkway. The road shall be constructed of a material such as gravel or woodchips that will provide a sufficient barrier to prevent soil from embedding into vehicle tires.

I. **Damage to City Property or damage to neighboring property** shall be repaired or restored in a timely manner as deemed appropriate by the Building Official.

J. **Trespassing-** No contractor shall enter upon any property without approval of the owner of that property and the Building Official.

4. CONSTRUCTION REQUIRING PERMITS

A building permit is required for the construction of any building or structure, any alterations or additions to any building or structure or appurtenance thereto, including but not limited to:

1. The removal of any wall or portion thereof.
2. The removal or changing of any structural beam or bearing support.
3. The removal or changing of any required means of egress.
4. Rearrangement of parts of a structure affecting the exit requirements.
5. Construction or resurfacing of driveways and off street parking facilities.
6. Construction of all flat work.
7. Installation of siding in excess of one hundred (100) square feet.
8. Deck, Porch, stair and stoop construction or replacement.
9. Installation or alteration to an elevator.
10. Exterior door or window replacement or installation involving structural changes.
11. Addition to, alteration of, replacement or relocation of any standpipe system, water supply, plumbing, sewer, drainage, gas, soil waste, vent or similar piping, electrical wiring, heating, air conditioning, or other mechanical components.
12. The construction of any fence, sign, shed, or garage.
13. Altering any land grade or to remove a tree with a diameter of 10 inches diameter at breast height (DBH) or greater.
14. Installing of a swimming pool, any accessory structure or a solar collector.

A permit is not required for any repairs to a building or structure that do not result in the installation or relocation of any structural elements, electrical, plumbing, or mechanical system or for any decorating of any building or structure.

5. REQUIRED INSPECTIONS

TO SCHEDULE CALL 847-318-5291

Certain construction projects, might require additional inspections or FINAL inspections from: BUILDING, FIRE, PLANNING, ZONING, ENVRONMENTAL HEALTH, ENGINEERING, AND FORESTY.

SITE DEV.	**Pre-Demolition- safety fencing, erosion control, tree preservation, utility shut off, etc.**
CONCRETE:	**Footing / piers / foundation walls / all interior / exterior slabs (prior to pouring)**
STRUCTURAL:	**Drain tile / Damp proofing, rough framing, fire-stopping, insulation, pre-drywall, anything structural, FINAL / CO**
HVAC:	**Rough ducting, A/C, furnace, FINAL**
FIRE:	**Rough alarm / fire suppression, alarm / fire suppression FINAL**
ELECTRICIAL:	**Services, rough electrical piping, miscellaneous electrical, FINAL**
PLUMBING:	**Water / sewer service and/ or repair, drain tile, lawn sprinkler, water heater, rough piping, yard drainage, miscellaneous plumbing, FINAL**
FINALS ONLY:	**Fences, swimming pools, play sets, sheds and all miscellaneous projects.**

6. GRADING GUIDELINES

- All Grades, Patios, sidewalks, Driveways etc. should be **AT OR LOWER** than the neighboring properties, and shall not drain onto neighboring properties, unless the neighborhood is design that way.
- A minimum of six inches (6″) of foundation shall be exposed.
- Swales are suggested at the property lines to drain toward the front and rear.
- A rough drainage system, pre-sod and final landscaping inspections are required.
- A Rear Yard Drainage System is required (18″ or 24″ Precast Basin w/ 2″-3″ reducer and grated lid).
- The Drainage Basin System shall be located at the existing lowest area of the property, and designed to assist neighboring drainage also.

SUGGESTED GRADING DESIGNS

Suggested Swale Design

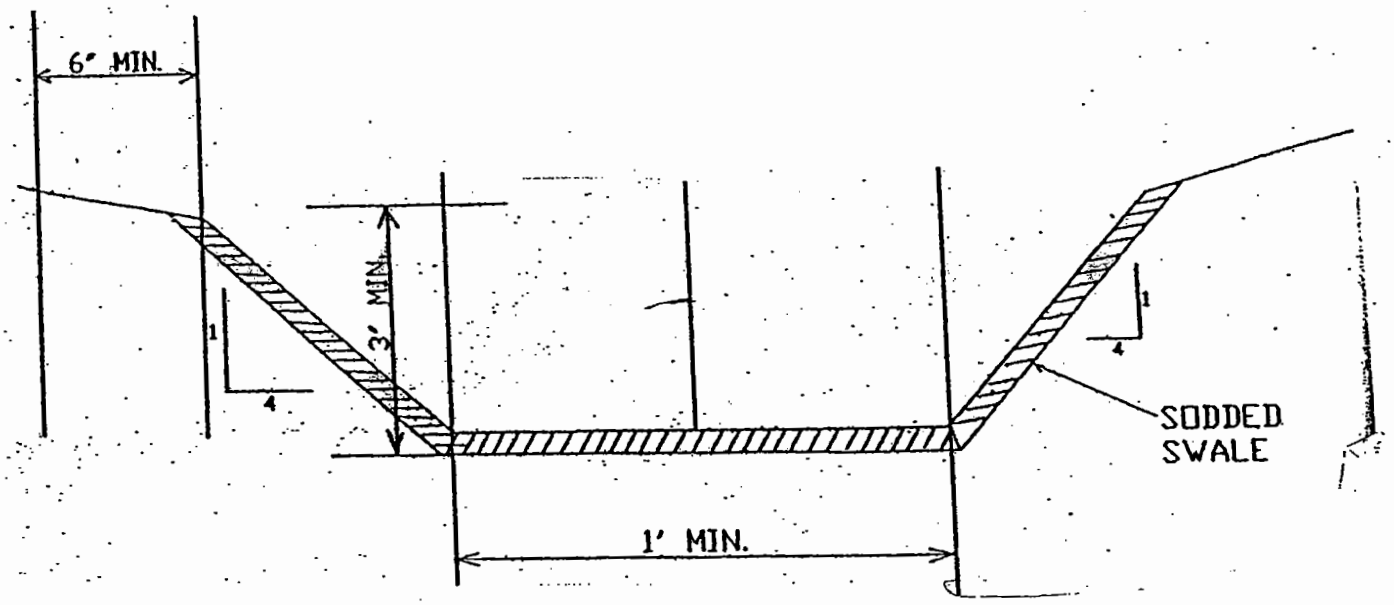

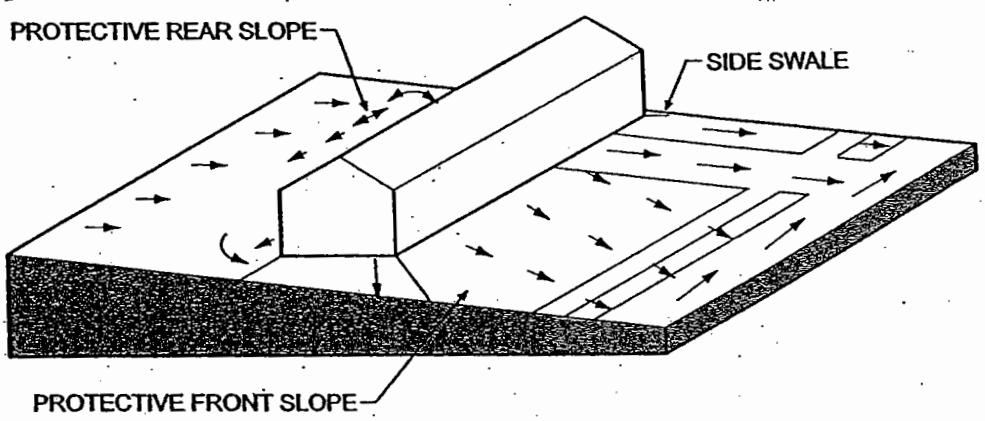

GRADING METHOD FOR LOT WHERE SLOPE IS FROM REAR TO FRONT LOT.
DRAINAGE SWALES ARE LOCATED AT REAR AND SIDES OF DWELLING.

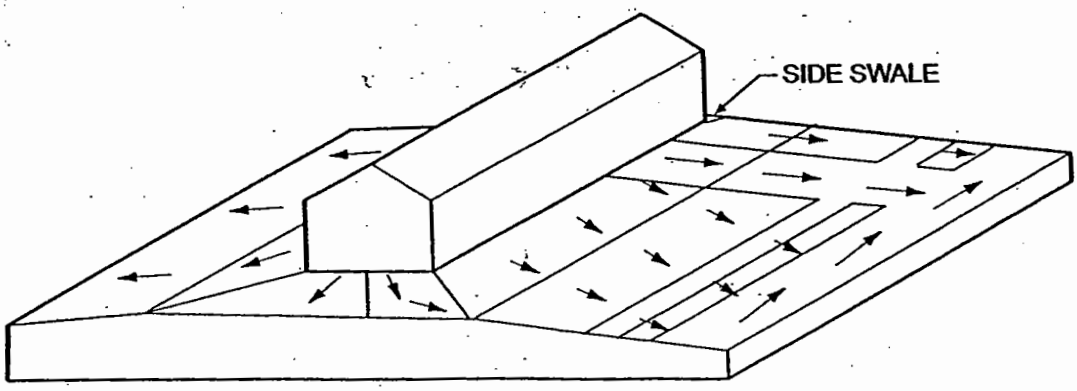

GRADING METHOD FOR LOT WHERE DWELLING IS LOCATED ON A RIDGE.
DRAINAGE SWALES ARE LOCATED AT SIDE YARDS IN AREA OF POSITIVE SLOPES.